CHRIST
COLLEGE OF ENGINEERING AND TECHNOLOGY
(Approved by AICTE, New Delhi and Affiliated to Pondicherry University)
Pitchaveeranpet, Moolakulam, Pondicherry - 605010.
(A Unit of Sam Paul Educational Trust)

DEPARTMENT OF ECE

Project Title :
Anti-sleep detector alarm for driver

Micro project work by:
Mohamed Imraan. M
Karthikeyan. S
Pushparaj. K

Under the mentorship of:
S.S. Karthik, SAP/ECE

Project Overview

- ❇ Introduction
- ❇ Problem Statement
- ❇ Components Used
- ❇ Circuit diagram
- ❇ Working Principle
- ❇ Software and Coding
- ❇ Applications
- ❇ Advantages
- ❇ Conclusion
- ❇ Future Enhancement

Introduction

This project monitors driver drowsiness using an Eye Blink Sensor. If the driver falls asleep, a buzzer sounds, and the motor (vehicle) turns off, preventing accidents.

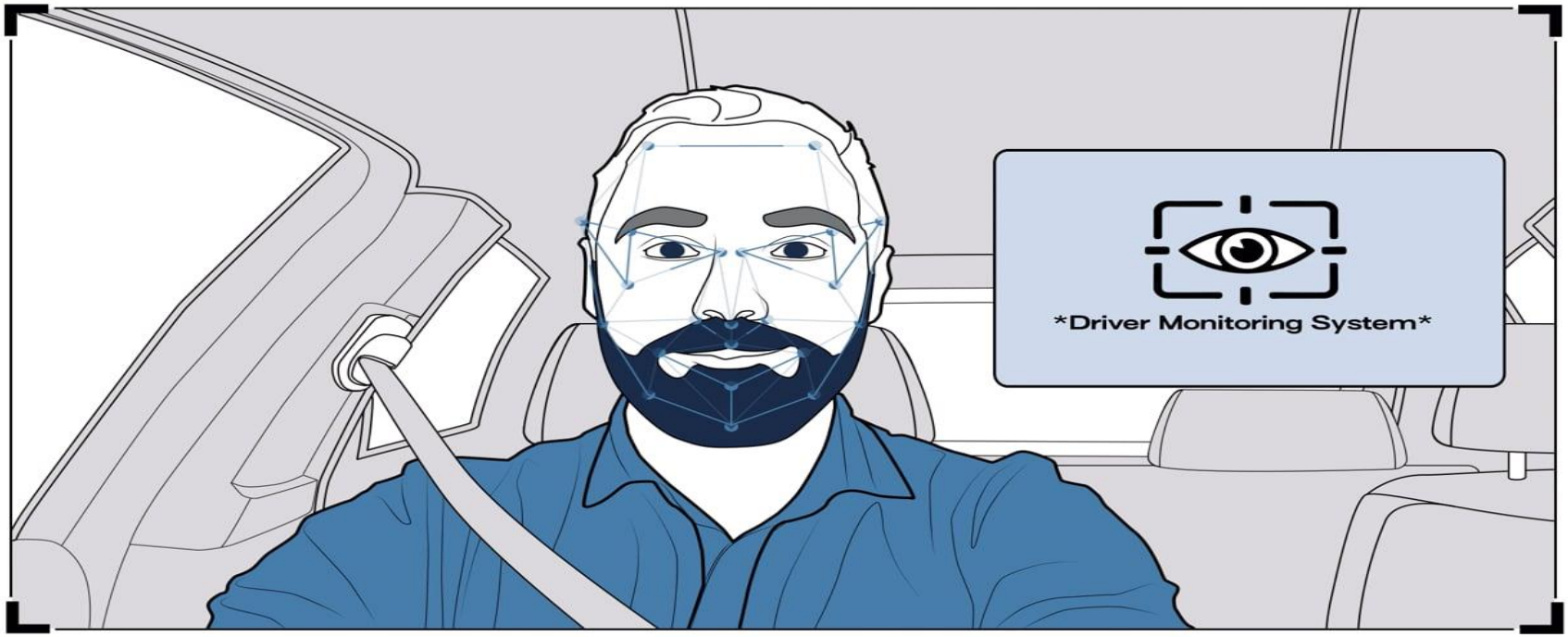

Problem Statement – Why This Project?

Every year, thousands of road accidents occur due to driver fatigue and drowsiness. Many drivers unknowingly fall asleep while driving, leading to severe accidents. The goal of our project is to develop a low-cost and effective system that can monitor a driver’s alertness and take immediate action when drowsiness is detected.

Components Used

- ✪ Arduino UNO
- ✪ Eye Blink Sensor
- ✪ Single-Channel 5V Relay Module
- ✪ Gear Motor
- ✪ 9V Battery
- ✪ Buzzer
- ✪ Connecting Wires

Circuit Diagram

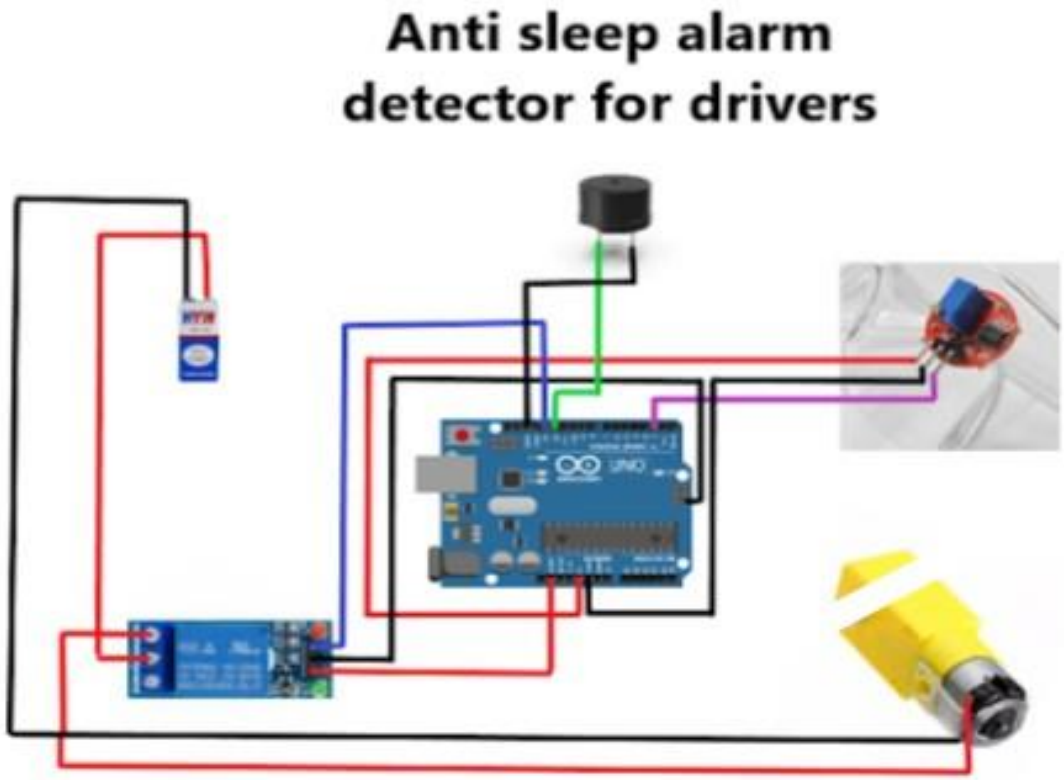

Working Principle

The Eye Blink Sensor detects if the driver’s eyes remain closed for a set time. If detected, the system activates the buzzer and turns off the motor using a relay module, preventing accidents.

Software & Coding

✽ Arduino IDE is used for programming.

✽ The code continuously reads eye blink sensor values and triggers the buzzer and relay module when necessary.

```
const int blinkPin = 2;
const int motorPin = 13;
const int buzzerPin = 12;

long time;

void setup() {
  pinMode(motorPin, OUTPUT);
  pinMode(buzzerPin, OUTPUT);
  pinMode(blinkPin, INPUT);
  digitalWrite(motorPin, HIGH); // Motor ON initially
}

void loop() {
  if (!digitalRead(blinkPin)) {  // If eyes are closed
    time = millis();

    while (!digitalRead(blinkPin)) {  // Continue while
eyes are closed
      digitalWrite(buzzerPin, LOW);
      digitalWrite(motorPin, LOW);
      delay(1000);
    }
  } else {
    if (TimeDelay() >= 3) {
      digitalWrite(buzzerPin, HIGH);
    }
    if (TimeDelay() >= 4) {
      digitalWrite(motorPin, HIGH);
    }
  }
}

int TimeDelay() {
  long t = millis() - time;
  return t / 1000;  // Convert milliseconds to seconds
}
```

Applications

❀ Used in cars, trucks, and buses to prevent accidents.

❀ Helps long-distance drivers stay alert.

❀ Can be integrated into public transport for passenger safety.

Advantages

- Prevents accidents caused by driver fatigue.

- Provides real-time monitoring of driver drowsiness.

- Easy to install and cost-effective

CONCLUSION :

The Anti-Sleep Detector Alarm helps prevent accidents by detecting driver drowsiness using an eye blink sensor. When the driver’s eyes remain closed for too long, the system triggers an alarm and stops the vehicle, ensuring safety. This low-cost, efficient solution enhances road safety and can be improved with AI and IoT for better performance.

Future Enhancements – What's Next?

We plan to enhance this system further by:

✓ Integrating AI & Facial Recognition – To detect additional signs of fatigue like yawning and head nodding.

✓ Adding a GSM Module – To send alert messages to emergency contacts when drowsiness is detected.

✓ Cloud-Based Monitoring – To store and analyze driver alertness data

Thank you